LOW LEVEL ORDER PICKER

TOYOTA MATERIAL HANDLING

PICKING MADE EASY

- 6,000 to 8,000 lb. Capacity
- Up to 100" Rack Height Access
- 4-Point Enhanced Stability System
- Fork Height Travel Interlock (Option)
- Hands-free Lowering (Option)
- AC Drive and Lift Motors

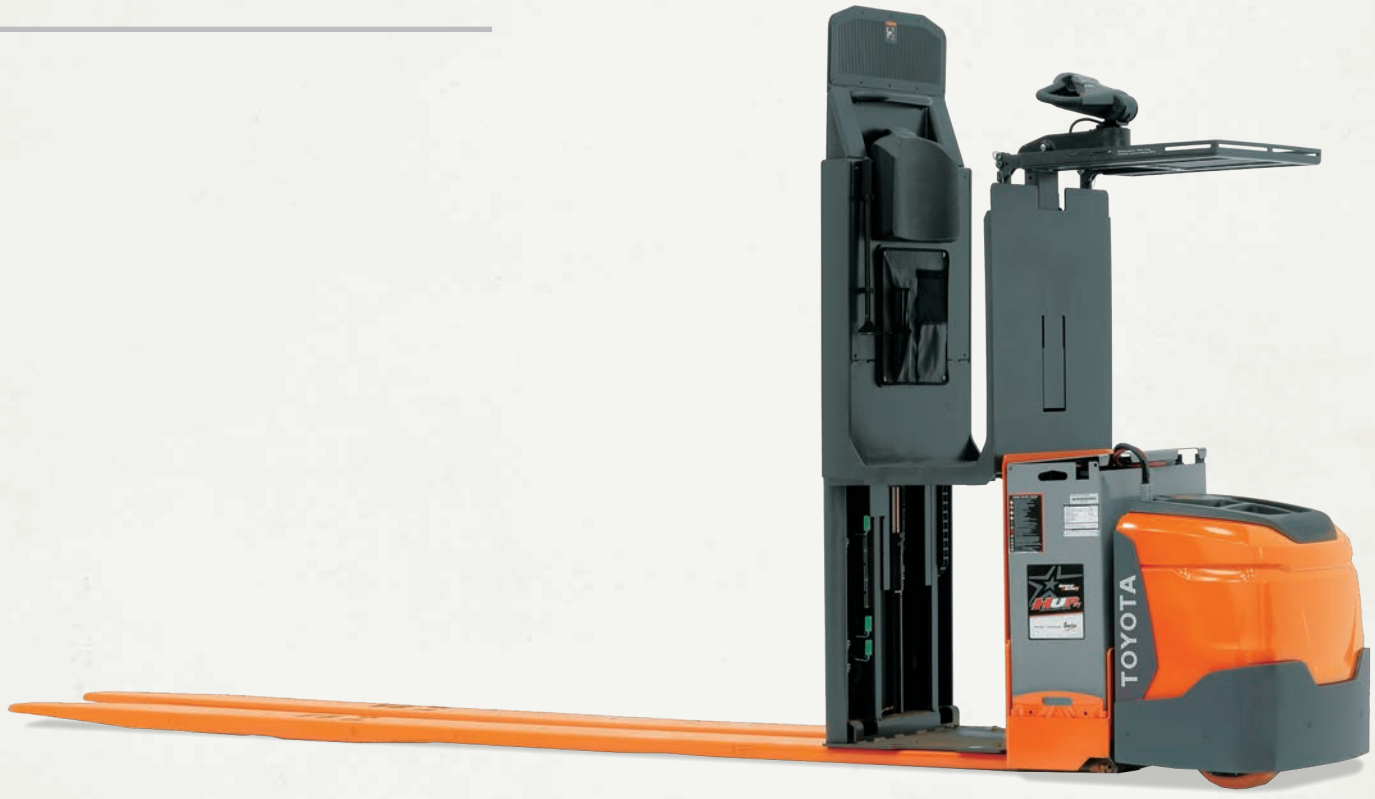

CR1-LP60 | CR1-LP80

CLASS 3

ELECTRIC PALLET JACKS | STACKERS | TOW TRACTORS

ToyotaForklift.com

YOUR VERSATILE PICKING ASSISTANT

INDUSTRY-LEADING

47 IN.

LIFT HEIGHT

Your high-throughput warehouse needs to pick products as efficiently as possible to keep operating costs low and expedite order fulfillment. This requires thoughtful placement of products and implementation of the right equipment to access fast-moving SKUs quickly.

Order pickers (high level pick windows) and center-controlled riders (floor level pick windows) serve the purpose for many customers but often don't meet the throughput requirements for faster moving items at low levels.

Enter Toyota's Low Level Order Picker. With the versatility to quickly pick products in lower bin locations while also providing access to second and in some instances, even third-level racking, next-level efficiency and optimal slotting are finally within your reach.

TOYOTA
Pas de
Marche
No Step

UP TO

80%

INCREASE IN PICK-FACE
FOR FLOOR LEVEL PICKING

COMFORTABLE AND CONFIDENT

At Toyota, we focus on delivering comfortable and intuitively designed equipment to help you carry the load.

The Low Level Order Picker provides up to an 80% increase in pick-face compared to only floor level picking. Increasing SKU count, racking slow movers at intermediate pick heights for faster cycles times, and producing higher cube utilization is what this order picker is all about. The new ergonomics of the platform lift gives the order selector the ability to maximize their productivity throughout a full shift.

This new design helps reduce vibration transferred to the load and operator and a spacious 21" operating compartment with ample room for picking, entering, and exiting the forklift. An audible tone sounds to inform the operator when the compartment is fully lowered.

Electric power steering comes standard on every Low Level Order Picker, requiring less effort to turn for easier maneuverability when navigating aisles or loading and unloading trailers.

PRODUCTIVITY REDEFINED

The ability to travel while elevated and simultaneously use travel and lift/lower controls give operators the tools they need to get from pick to pick quickly and efficiently. Optional hands-free lowering further enhances productivity by providing a foot-operated pedal to lower the platform. With the added load tray feature, operators are provided additional assistance when picking multiple cases at an elevated height.

The Low Level Order Picker comes equipped with a powerful AC drive motor that provides a smooth, efficient operation while minimizing downtime. Fewer wearable parts, high energy efficiency, and less periodic maintenance reduce downtime and operational costs so you can stay on the move. With the fastest travel speeds in the industry, this Low Level Order Picker will only increase productivity.

LOW LEVEL ORDER PICKER ADVANTAGES

- **HIGH LIFT OPERATOR COMPARTMENT** offers 47" of lift height, providing a wide picking window and access to 2nd and even 3rd level racks
- **OPTIONAL SIMULTANEOUS LIFT/LOWER AND TRAVEL** enables operators to control multiple functions at once to optimize picking
- **STANDARD POWER STEERING** reduces the effort required to turn for easier maneuverability and improved ergonomics
- **SINGLE, DOUBLE, AND TRIPLE FORK LENGTHS** deliver flexibility to handle up to three pallets simultaneously. Triple fork lengths can lift up to 8k capacity
- **HANDS-FREE LOWERING OPTION** allows the operator compartment to be lowered using a foot pedal for improved productivity
- **REDUCED VIBRATION** transferred to the load and operator for a smooth, comfortable ride
- **AC DRIVE SYSTEM** provides efficient, low-maintenance operation and powerful performance

MAXIMIZE YOUR UPTIME

THE TOYOTA WAY

In your fast-paced environment, you can't afford for your forklift to experience downtime. Built using the Toyota Production System and engineered with Toyota Genuine Parts, the Low Level Order Picker takes quality and longevity to a whole new level.

The ductile iron undercarriage, steel-reinforced bumper, and durable fork frame protect vital components and reduce maintenance costs. An optional cold storage conditioning package further protects electrical and hydraulic components from condensation and cold temperatures down to -20° C.

The forklift height travel interlock feature helps reinforce operator training to keep the forks raised when traveling over docks and uneven surfaces by limiting travel speed when the forks are lowered.

TOYOTA MOVES WITH YOU

A NAME YOU CAN TRUST

Our material handling equipment carries something no others can: The Toyota name. As one of the most recognized and respected global brands, the Toyota name is synonymous with quality, durability, and value. It also provides a peace of mind that few companies of any kind can match.

Every Toyota Forklift is built using the world-renowned Toyota Production System (TPS), which features Just-in-Time parts delivery and quality checks at every step of the manufacturing process.

It's all part of the Toyota philosophy of "kaizen," the dedication to continuous improvement. Instituted by our founder more than 80 years ago, it's a principle that still guides us today. As long as our forklifts carry the Toyota name, we'll continue striving to improve processes and quality.

THE TOYOTA 360 SUPPORT PROMISE

In addition to moving more pallets more quickly through your facility, you can count on Toyota's dedication to quality and world-renown manufacturing methods to deliver unprecedented uptime and lower maintenance costs. Toyota 360 Support comes standard with every Toyota Order Picker, meaning you benefit from an industry-leading two-year parts warranty, the support of over 65 dealerships, 3500+ Toyota Certified Technicians, and guaranteed 4-hour emergency response time.

65+
DEALERSHIPS

3500+
TOYOTA CERTIFIED TECHNICIANS

4-HOUR
GUARANTEED
EMERGENCY RESPONSE TIME

CAPACITY	LOAD CENTER	MAXIMUM OPERATOR PLATFORM HEIGHT
6000-8000 LBS.	24 IN.	47 IN.

INDUSTRIES

Cold Storage | Distribution | General Manufacturing | General Warehousing | Retail

STANDARD EQUIPMENT

PERFORMANCE

- 24 Volt Electrical System
- AC Drive Motor
- Regenerative plugging
- Electric Power Steering
- Heavy Duty Swivel Caster
- Battery Discharge Indicator with Lift Interrupt
- Hour Meter Indicator
- Electric Disc Brake
- Dual Lift Cylinders
- UL “E” Construction

BODY/EXTERIOR DESIGN

- Heavy Duty Bumper Guard
- Steel Pull Rods
- Stainless Steel Lift Pins
- Battery Compartment
  - 31.96 in. wide
  - 13.38 in. length
  - 31.0 in. height
- 60 in. Load Backrest
- Emergency Power Disconnect

OPERABILITY & ERGONOMICS

- Cushioned Knee Pad
- Cushioned Operator Backrest
- Fully Lowered Alert (notifies operator)
- Directional Thumb Wheels
- Multifunction Control Handle with Ergonomically Angled Hand Grips
- Soft-cushioned Operator Sensing Floor Mat
- Operator Platform, 47 in. Elevating Height
- Fork Height Travel Interlock

OPTIONAL EQUIPMENT

LOAD WHEELS

- Various Load Wheel Options

TIRES

- Various drive tire options

SPECIAL MODELS

- UL Type “E” Rating
- Custom paint colors
- Cold Storage Conditioning

Optional Equipment, continued

BODY

- Single Tier Accessory Bar
- Operator Cooling Fan
- LED Work Light
- Pick Rake
- Travel Alarm Options
- Electronic PIN Code Access Pad
- Keyless On/Off Switch
- Operator Compartment Sensor System
- 10-Amp Power Hook-up, On-Board Terminal
- Static Strap
- Large Storage Shelf
- Small Storage Shelf
- Mesh Storage Tote
- Magnetic, Battery-Mounted Storage Tray
- Large Magnetic, Battery-Mounted Storage Tray
- Dual Stretch Wrap Holders
- Greasable Bushings
- Greasable Steer Bearing

BATTERY ACCESSORIES

- Battery Compartment Rollers w/ Dual Sidegates
- Various Battery Connector Options
- Battery Gate Interlock
- Battery Spacers (front to back)

LOAD HANDLING

- 72” Load Backrest Extension
- Hands-Free Lowering
- Compartment Lift-Limit Switch w/ Override
- Lift/Limit and Horn on LBR
- Jog Only Buttons for walk-beside order picking
- Travel at Height
- Pallet Centering Guides (for plastic pallets)
- Pallet Entry Rollers
- Various Fork Options

Optional equipment and features may vary by model and configuration, and may not be appropriate for all applications and circumstances. Please contact your local, authorized Toyota Dealer for a complete list of available options and review the Features Brochure for a more thorough discussion on the appropriate applications for many of these options.

TRUCK SPECIFICATIONS

					MODEL NUMBERS						
GENERAL DATA					**CR1-LP60**			**CR1-LP80**			
Load Capacity				lb (kg)	6000 (2722)			8000 (3629)			
Power Type					Battery			Battery			
Operator Position					Stand-up (Center)			Stand-up (Center)			
EXTERIOR DIMENSIONS					**CR1-LP60**			**CR1-LP80**			
A	Fork Length			in (mm)	48 (1219)	84 (2133)	96 (2438)	84 (2133)	96 (2438)	144 (3658)	144 (3658)
B	Individual Fork Width			in (mm)	9 (229)	10 (254)	10 (254)	10 (254)	10 (254)	10 (254)	10 (254)
C	Overall Fork Width (outer edge to edge)			in (mm)	27.0 (686)	27.5 (699)	27.5 (699)	27.5 (699)	27.5 (699)	27.5 (699)	27.5 (699)
D	Fork Height	Lifted, at load wheel		in (mm)	9.3 (236)			9.3 (236)			
		Lifted, at heel		in (mm)	9.8 (249)			9.8 (249)			
		Lowered, at load wheel		in (mm)	3.3 (84)			3.3 (84)			
		Lowered, at heel		in (mm)	3.8 (96)			3.8 (96)			
E	Fork Lifting Range			in (mm)	6 (152)			6 (152)			
F	Power Unit Height			in (mm)	35.3 (897)			35.3 (897)			
G	Power Unit Width			in (mm)	33.3 (846)			33.3 (846)			
H	Operator's Platform Height (Elevated)	Forks Lowered		in (mm)	40 - 41 (1016 - 1041)			40 (1016) - 41 (1041)			
		Forks Raised		in (mm)	46 - 47 (1168 - 1194)			46 (1168) - 47 (1194)			
I	Wheelbase	Lowered		in (mm)	93.2 (2367)	113.7 (2888)	113.7 (2888)	113.7 (2888)	113.7 (2888)	141.1(3584)	161.7(4107)
		Raised		in (mm)	88.6 (2250)	109 (2769)	109 (2769)	109 (2769)	109 (2769)	136.4 (3465)	157 (3988)
J	Underclearance			in (mm)	2.5 (63)			2.5 (63)			
K	Truck Overall Length			in (mm)	111.2 (2824)	147.2 (3739)	159.2 (4044)	147.2 (3739)	159.2 (4044)	207.2 (5263)	207.2 (5263)
L	Truck Overall Width			in (mm)	33.3 (846)			33.3 (846)			
M	Load Wheel location	Lowered		in (mm)	40.3 (1024)	60.4 (1534)	60.4 (1534)	60.4 (1534)	60.4 (1534)	87.5 (2223)	108.1 (2745)
		Raised		in (mm)	35.3 (897)	55.4 (1407)	55.4 (1407)	55.4 (1407)	55.4 (1407)	82.8 (2103)	103.4 (2625)
N	Turning Radius (Tractor-first Only)	Forks Raised	Left	in (mm)	98.9 (2512)	119 (3023)	119 (3023)	119 (3023)	119 (3023)	125.9 (3193)	167 (4242)
			Right	in (mm)	101 (2565)	120.7 (3066)	120.7 (3066)	120.7 (3066)	120.7 (3066)	128.2 (3256)	168.5 (4277)
PERFORMANCE DATA					**CR1-LP60**			**CR1-LP80**			
Travel Speeds	Maximum			mph (km/h)	9.0 (14.5)			9.0 (14.5)			
TRUCK WEIGHTS					**CR1-LP60**			**CR1-LP80**			
Total Weight	Without Battery			lb (kg)	Contact Dealer			Contact Dealer			
TIRES					**CR1-LP60**			**CR1-LP80**			
Tires	Tire Type	Drive / Load / Caster			Rubber/Polyurethane/Polyurethane			Rubber/Polyurethane/Polyurethane			
	Number Wheels (x = driven)	Drive / Load / Caster			1X / 2 / 2			1X / 2 / 2			
	Size (dia. X width)	Drive		in (mm)	12 x 4.75 (305 x 121)			12 x 4.75 (305 x 121)			
		Load		in (mm)	3.25 x 5.91 (83 x 150)			3.25 x 5.91 (83 x 150)			
		Caster		in (mm)	6 x 2 (152 x 51)			6 x 2 (152 x 51)			
Brake Pedal					Electric Disc Brake			Electric Disc Brake			
POWER SYSTEM					**CR1-LP60**			**CR1-LP80**			
Battery Type					Lead-acid			Lead-acid			
Battery (6-hour ratings)	Compartment Size (W x L x H)	Maximum		in (mm)	13.38 x 32 x 31 (340 x 812 x 787)			13.38 x 32 x 31 (340 x 812 x 787)			
	Voltage / Capacity	Maximum		V / Ah	24 / 750			24 / 750			
	Weight	Max.		lb (kg)	1500 (680)			1500 (680)			
		Min.		lb (kg)	980 (444)			980 (444)			
Electric Motors	Drive	(60 min.)		hp (kw)	5.5 (4.1)			5.5 (4.1)			

EXTERIOR DIMENSIONS

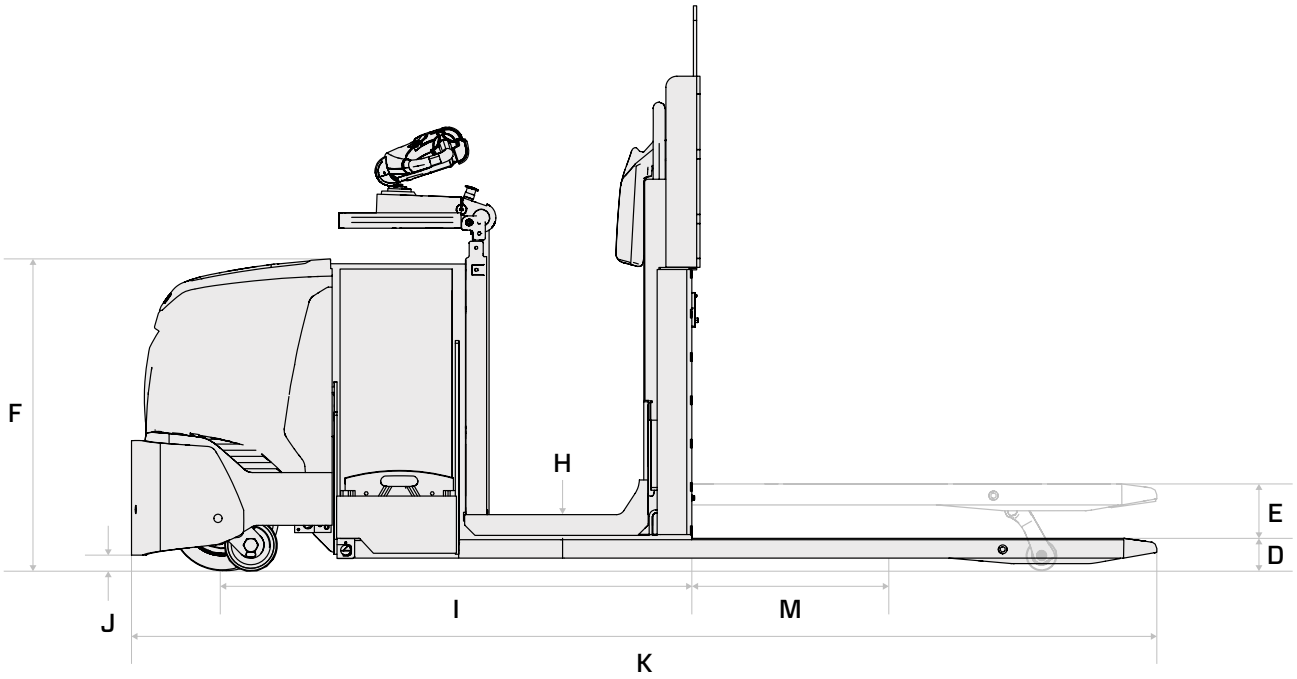

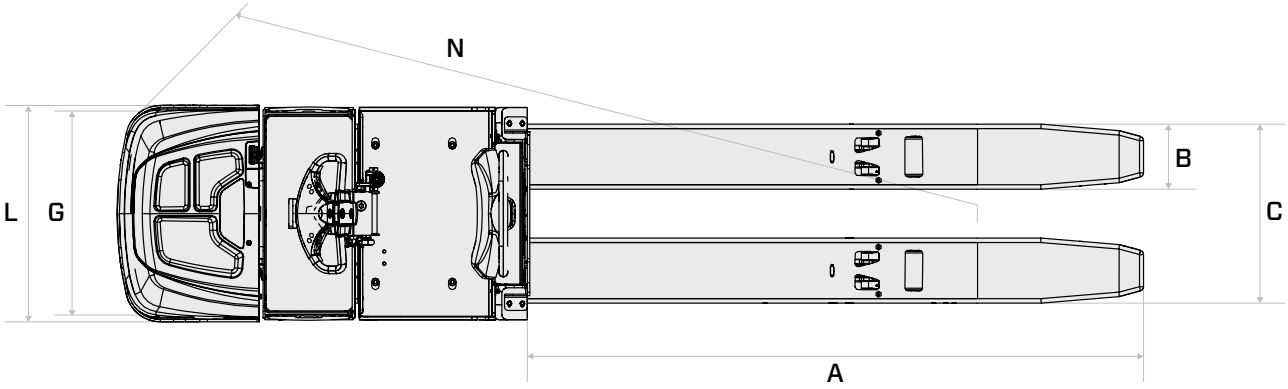

TOYOTA
MATERIAL HANDLING

WORLD-CLASS MATERIAL HANDLING SOLUTIONS

PARTNER WITH TOYOTA, AND LET US HELP DEVELOP THE RIGHT SOLUTION FOR YOU.

With access to the world's industry-leading lineup of material handling products, Toyota dealers are uniquely positioned to help you solve your wide-ranging challenges. Built for every application, Toyota can provide the most complete set of solutions for material handling, automation, energy, advanced logistics, and warehouse optimization.

Toyota is here to help optimize your business for maximum efficiency. Utilizing Toyota Lean Management principles, Toyota dealers can provide insights and develop appropriate plans to tackle your specific operational needs. This unique approach to optimization and elimination of waste can provide you with significant competitive advantages and a sustainable lean culture for lasting process improvement.

Visit us at: ToyotaForklift.com for more information.

LOWORDERPICKERCOMP

©2021 Toyota Material Handling, Inc.